PROJOY electric

Projoy Electric Co., Ltd.
ADD: No.90 Chunyao Rd, Xiangcheng District, Suzhou, Jiangsu, China
Email: sales@projoy-electric.com
Web: www.projoy-electric.com

Manufacturer's declaration in accordance with the requirements of G98-Amd. 6 (2021-09) standard Sec.s 9.7.1, 9.7.2, and G99-Amd. 8 (2021-09) standard Sec.s 9.1.7, 9.1.8 regarding "Cyber Security"

Projoy Electric Co., Ltd.

based in No.90 Chunyao Rd, Xiangcheng District, Suzhou, Jiangsu, China.

declares the following:

1) The Projoy Electric Co., Ltd company's inverters include a system of internal and external logic communications as summarized in the following scheme:

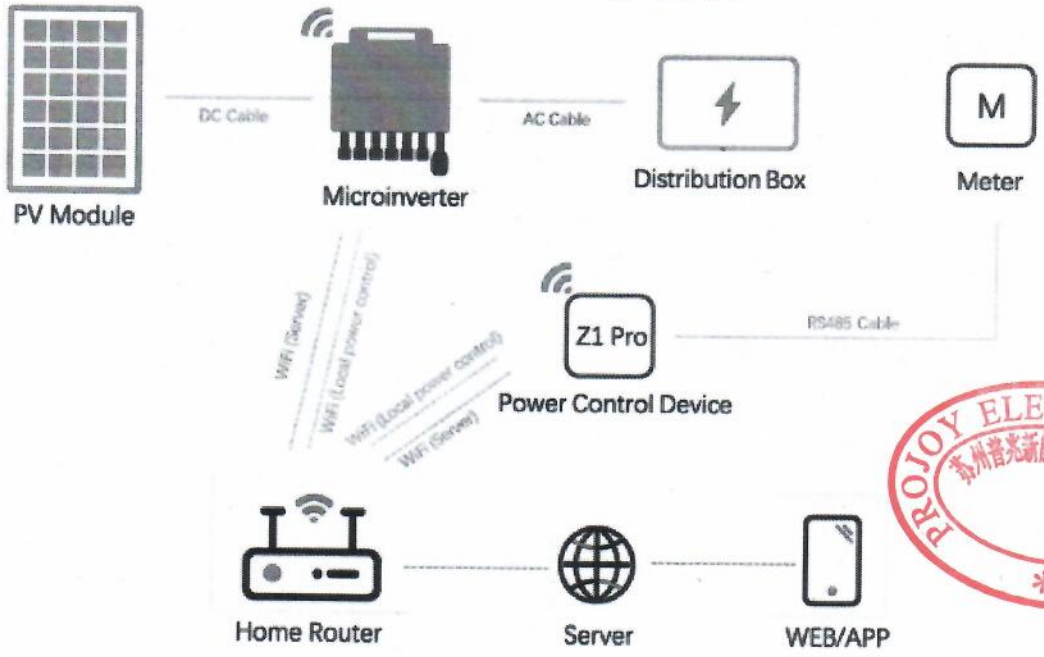

where the main components involved and their main functions are explained in the following table:

Name	Meaning	Function	Location
PMS	Power Management System	monitoring and management of power fluxes through the inverter, execution of local logic functions depending on grid parameters values	Microinverter
Monitoring	WiFi	Transmit and data to the server and receive data from the server	Microinverter/Power Control Device
PCS	Power Control System	Monitoring the output power of the solar system and control the it	Power Control Device
Router	Router Device	Provide a WiFi Network for te monitoring	Third-party Device
Meter	Meter	Measure the power data at the AC port of home grid	Third-party Device

and the subjects/parties involved in communications with the PROJOY inverters are listed in the following table, together with the purposes of the respective communications:

Projoy Electric Co., Ltd.
ADD: No.90 Chunyao Rd, Xiangcheng District, Suzhou, Jiangsu, China
Email: sales@projoy-electric.com
Web: www.projoy-electric.com

Subject	Means and devices	Operations
End User	Mobile device (Talent Home App), PC (Talent Portal WEB)	monitoring of historical data,
PROJOY service or installer service	Mobile device (Talent Pro App), PC (Talent Portal WEB)	remote diagnosis, system behavior monitoring, remote updates

2) All communications between internal components of the microinverter/power control device take place via appropriate serial port (TTL) and are not directly connected to any device or system outside the microinverter.

3) The only communication port between the microinverter/power control device and the outside is constituted by the monitoring inside the microinverter; the communication between inverter and the outside world can take place via WiFi router.

4) All communications between the PROJOY server and the subjects/parties are cyber protected
by SSL technology.

5) The cyber-security assessment of the PROJOY was performed according to the ETSI EN 303 645 standard, and it is reported according to the Table B.1 form of the same standard:

EN 303 645 v2.1.1 (2020-06) Table B.1: Implementation of provisions for consumer IoT security			
Clause number and title			
Reference	Status	Support	Detail
5.1 No universal default passwords			
Provision 5.1-1	MC(1)	NA	device don not permit user's login
Provision 5.1-2	MC(1)	NA	
Provision 5.1-3	M	NA	
Provision 5.1-4	MC(8)	NA	
Provision 5.1-5	MC(5)	NA	
5.2 Implement a means to manage reports of vulnerabilities			
Provision 5.2-1	M	Y	
Provision 5.2-2	R	Y	
Provision 5.2-3	R	Y	
5.3 Keep software updated			
Provision 5.3-1	R	Y	
Provision 5.3-2	MC(5)	Y	
Provision 5.3-3	MC(12)	NA	the end user can't update any component: only manufacturer assistance service

Projoy Electric Co., Ltd.
ADD: No.90 Chunyao Rd, Xiangcheng District, Suzhou, Jiangsu, China
Email: sales@projoy-electric.com
Web: www.projoy-electric.com

			personnel can do it remotely
Provision 5.3-4	RC(12)	Y	The manufacturer manages the updates of the systems by means of remote automatisms, selectively by type of machine or by activating special functions at the request of the user
Provision 5.3-5	RC(12)	N	see note at 5.3-4
Provision 5.3-6	RC(9,12)	N	see note at 5.3-4
Provision 5.3-7	MC(12)	Y	
Provision 5.3-8	MC(12)	N	see note at 5.3-4
Provision 5.3-9	RC(12)	N	
Provision 5.3-10	M(11,12)	Y	
Provision 5.3-11	RC(12)	N	
Provision 5.3-12	RC(12)	N	
Provision 5.3-13	M	Y	
Provision 5.3-14	RC(3,4)	NA	
Provision 5.3-15	RC(3,4)	NA	
Provision 5.3-16	M	Y	
5.4 Securely store sensitive security parameters			
Provision 5.4-1	M	Y	
Provision 5.4-2	MC(10)	Y	
Provision 5.4-3	M	NA	hard-coded identity not used in source code
Provision 5.4-4	M	Y	
5.5 Communicate securely			
Provision 5.5-1	M	Y	
Provision 5.5-2	R	Y	
Provision 5.5-3	R	Y	
Provision 5.5-4	R	N	
Provision 5.5-5	M	Y	
Provision 5.5-6	R	Y	
Provision 5.5-7	M	Y	
Provision 5.5-8	M	Y	
5.6 Minimize exposed attack surfaces			
Provision 5.6-1	M	Y	
Provision 5.6-2	M	Y	
Provision 5.6-3	R	Y	
Provision 5.6-4	MC(13)	NA	no debug interface accessible
Provision 5.6-5	R	Y	
Provision 5.6-6	R	Y	
Provision 5.6-7	R	Y	
Provision 5.6-8	R	N	
Provision 5.6-9	R	Y	

PROJOY ELECTRIC CO., LTD.

PROJOY electric

Projoy Electric Co., Ltd.
ADD: No.90 Chunyao Rd, Xiangcheng District, Suzhou, Jiangsu, China
Email: sales@projoy-electric.com
Web: www.projoy-electric.com

5.7 Ensure software integrity			
Provision 5.7-1	R	N	
Provision 5.7-2	R	N	
5.8 Ensure that personal data is secure			
Provision 5.8-1	R	NA	no personal data transit
Provision 5.8-2	M	Y	applicable to server/cloud services and to the customer App for mobile devices
Provision 5.8-3	M	Y	
5.9 Make systems resilient to outages			
Provision 5.9-1	R	Y	
Provision 5.9-2	R	Y	
Provision 5.9-3	R	Y	
5.10 Examine system telemetry data			
Provision 5.10-1	RC(6)	N	
5.11 Make it easy for users to delete user data			
Provision 5.11-1	M	NA	no user/personal data are stored in microinverter
Provision 5.11-2	R	NA	
Provision 5.11-3	R	NA	
Provision 5.11-4	R	NA	
5.12 Make installation and maintenance of devices easy			
Provision 5.12-1	R	NA	no installation/maintenance operations are available to the end user
Provision 5.12-2	R	NA	
Provision 5.12-3	R	NA	see note at 5.3-4
5.13 Validate input data			
Provision 5.13-1	M	Y	
6 Data protection provisions for consumer IoT			
Provision 6.1	M	Y	it only applies to the server/cloud side of the service,
Provision 6.2	MC(7)	Y	
Provision 6.3	M	Y	
Provision 6.4	RC(6)	Y	no user/personal data are stored in microinverter
Provision 6.5	MC(6)	Y	

Conditions:

1) passwords are used;
2) pre-installed passwords are used;
3) software components are not updateable;
4) the device is constrained;
5) the device is not constrained;
6) telemetry data being collected;
7) personal data is processed on the basis of consumers' consent;
8) the device allowing user authentication;
9) the device supports automatic updates and/or update notifications;
10) a hard-coded unique per device identity is used for security purposes;

PROJOY ELECTRIC CO., LTD. 苏州青光新能源设备有限公司

PROJOY electric

Projoy Electric Co., Ltd.
ADD: No.90 Chunyao Rd, Xiangcheng District, Suzhou, Jiangsu, China
Email: sales@projoy-electric.com
Web: www.projoy-electric.com

11) updates are delivered over a network interface; 12) an update mechanism is implemented; 13) a debug interface is physically accessible.
Status' Column: M: Mandatory provision R: Recommended provision M C: Mandatory and conditional provision R C: Recommended and conditional provision
Support' Column: Y: Implemented N: Not implemented N/A: Not applicable

Projoy Electric Co., Ltd.

April 7st 2023